SHEPHERD
MICRO RACING TEAM

VELOX 8.3

NAME	BARANGER Fabien
DATE	03/30/2025
EVENT	Course de Ligue
TRACK	ARCA16 - Angoulême - France
AIR TEMP	20°C
TRACTION	good
BEST LAP	15,835

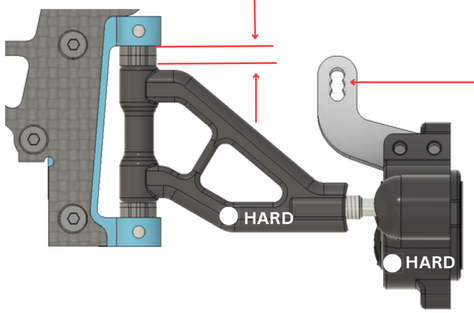

CASTER 1.0 mm

UPRIGHT INSERTS: CENTRIC ○ EXCENTRIC ✔

BUMP STEER 1.0 mm

FRONT ONEWAY POSITION

	HIGH		
BELT	210mm	210mm	207mm
FRONT — REAR			
BELT	210mm	210mm	207mm
		LOW	

ACTIVE ○ SHIM ___ mm

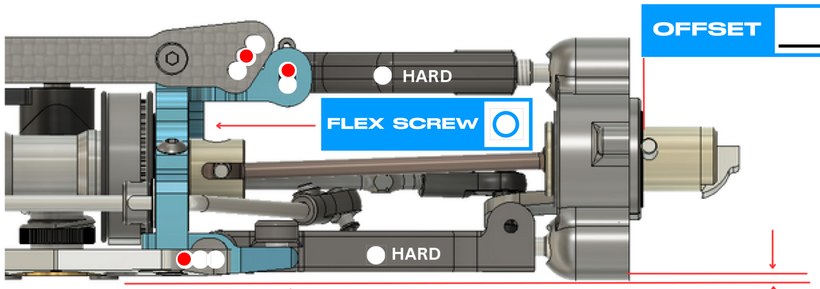

FLEX SCREW ○

OFFSET ___ mm

RIDE HEIGHT 8.0 mm

DOWNSTOP 0.6 mm

WHEELBASE: LONG ○ SHORT ✔

TOE IN/OUT 1.75°

CAMBER LEFT 2.0°

WIDTH 250.0 mm

CAMBER RIGHT 2.0°

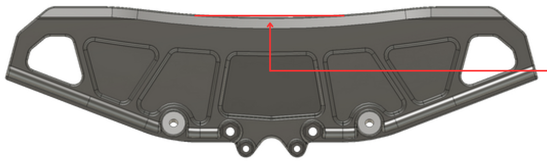

BODY Hyper Diablo PC

DISTANCE TO BUMPER PC mm

AWS BATTERY TRAY ○

CARBON ○ BRASS ○ | CARBON ○ BRASS ✔ | CARBON ○ BRASS ○

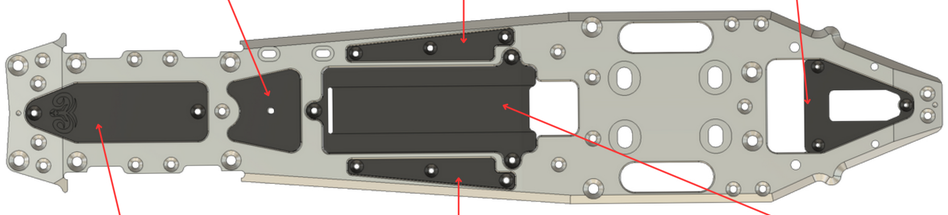

CARBON ○ BRASS ○ | CARBON ○ BRASS ✔ | CARBON ✔ BRASS ○

FRONT / REAR

FRONT LEFT	FRONT RIGHT	TYRES	REAR LEFT	REAR RIGHT
Matrix	Matrix	BRAND	Matrix	Matrix
32	32	SHORE	35	35
69	69	DIAMETER	76	76
		ADDITIVE		

SHOCKS

Gray Shepherd	SPRINGS	White Mugen
800	OIL	500
1,2	PISTON	2 x 1,2
1	HOLE	2
Extra soft	FP SPRING	Extra soft

ANTI-ROLL BAR

FRONT 2,4 mm REAR 3,0 mm

FRONT AXLE

SOLID ○ SPLIT ● 90 DEG ○ STR ○

CLUTCH

TYPE	Kit Shepherd
SHOE	Yellow
PRELOAD	1 mm
GAP	0,7

GEAR RATIO

1ST 19 / 62 2ND 24 / 57

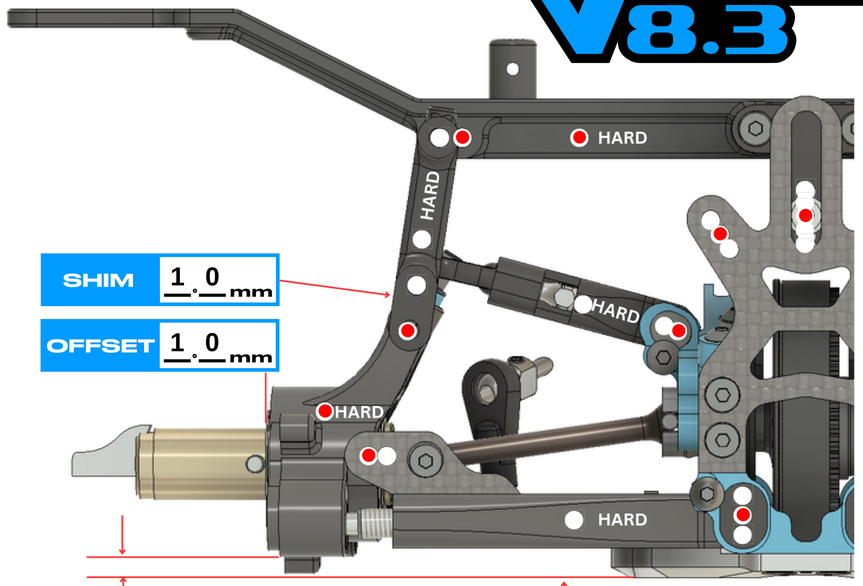

SHIM 1.0 mm

OFFSET 1.0 mm

DOWNSTOP 8.0 mm

RIDE HEIGHT 9.0 mm

CAMBER LEFT 3.0°

TOE IN/OUT 3.5°

CAMBER RIGHT 3.0°

WIDTH 260.0 mm

LONG ✔ MEDIUM ○ SHORT ○

8mm ○ 9mm ○ 10mm ●

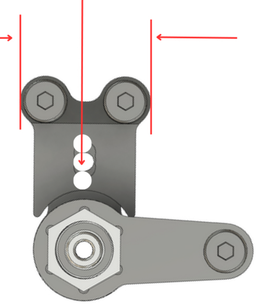

UPRIGHT INSERTS: F ○ R ◉

AERO DISCS: F ○ R ○

ENGINE	OS Speed	PIPE	Hasi		
MANIFOLD	Hasi	GLOWPLUG	RP7	FUEL	Maxima

NOTES

Lipo battery 1800 MAH
Servo CJ Power
20-gram weight in front of the engine
Carbon stiffener front bumper
Upright carbon return